BCS

A M E R I C A

710 Electric Start & Bumper

Serial Number Range 100000 - 116637

01.00

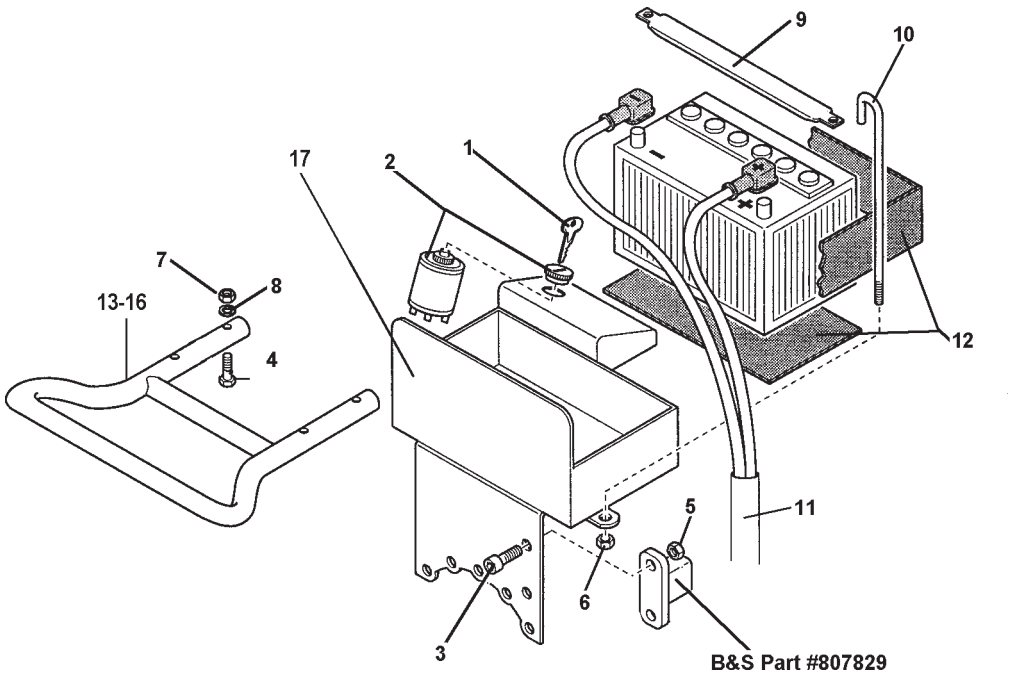

ID	PART NO	QTY	DESCRIPTION	ID	PART NO	QTY	DESCRIPTION
1	300.00276		KEY	11	580.57378		ELECTRIC START CABLES 5HP
2	300.00277		SWITCH	12	580.57381		BATTERY PADS
3	311.11090		SCREW TE M6X10	13	590.56067		BUMPER STD, 5HP B&S STD, IP,
4	311.12156		SCREW M8X60				INTEK & 5.5HP HONDA
5	312.11060		NUT M6	14	590.56053		BUMPER STD., 8HP HONDA
				15	922.56099		BUMPER WRAP AROUND, 5.5HP
6	312.41060		NUT, SELF LOCKING M6				HONDA & INTEK (OPTIONAL)
7	312.41080		NUT, SELF LOCKING M8	16	922.56100		BUMPER WRAP AROUND, 8HP
8	314.11084		FLAT WASHER 8.4				HONDA (OPTIONAL)
9	561.19937		BATTERY BRACKET	17	590.57375		BATTERY SUPPORT, 5HP & 8HP
10	561.49590		BATTERY TIEROD				

710 Electric Start & Bumper

Serial Number Range 116638- ------

01.01

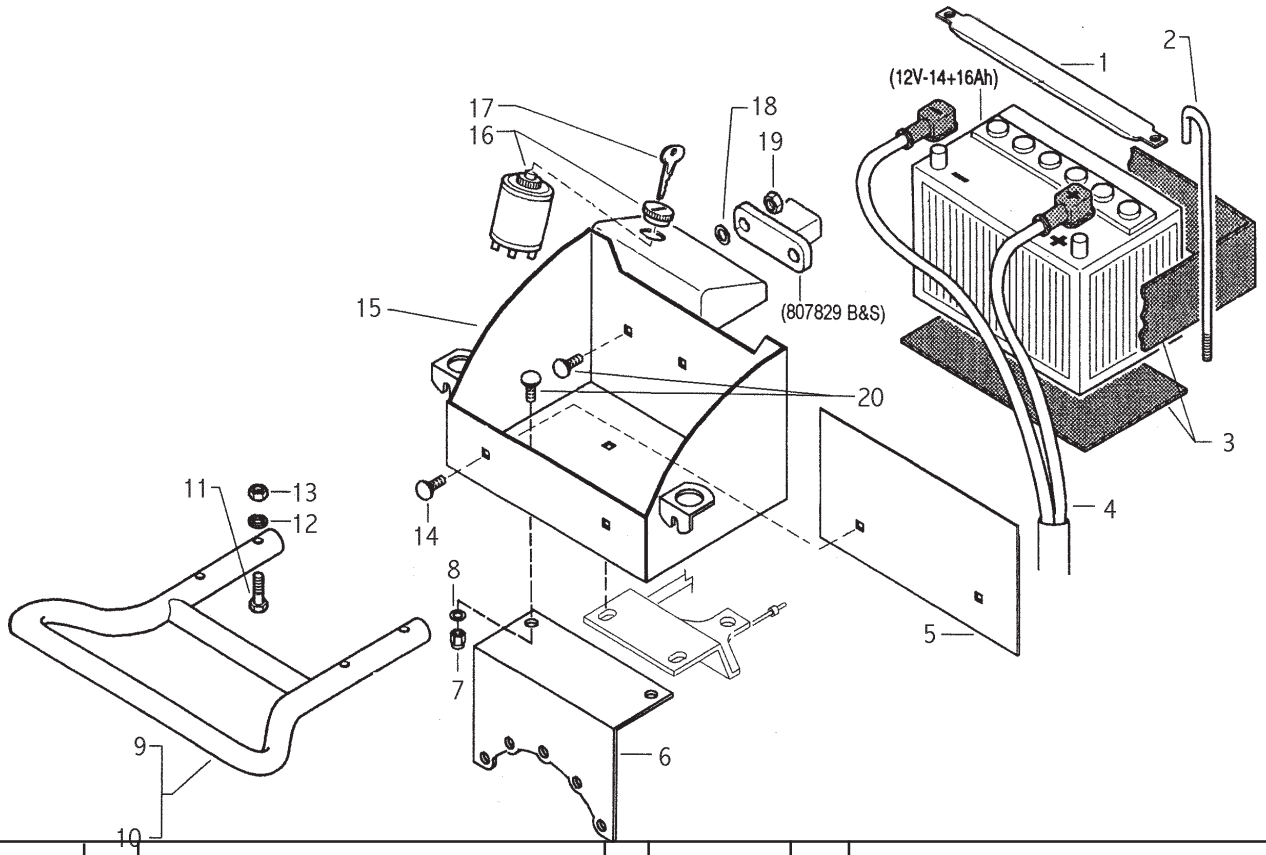

ID	PART NO	QTY	DESCRIPTION	ID	PART NO	QTY	DESCRIPTION
1	561.19937		BATTERY BRACKET	11	311.12156		SCREW M8X60
2	561.57387		BATTERY TIEROD	12	314.11084		FLAT WASHER 8.4
3	580.57397		BATTERY PADS	13	312.41080		NUT, SELF LOCKING M8
4	580.47496		ELECTRIC START CABLES 5HP	14	311.21558		BOLT
5	561.57398		PLATE	15	590.57395		BATTERY SUPPORT INTEK
6	561.57393		PLATE	16	300.00277		SWITCH
7	312.41060		NUT	17	300.00276		KEY
8	314.11064		WASHER	18	314.11090		WASHER
9	590.56053		BUMPER , INTEK ENGINES	19	312.41060		NUT
10	590.56067		BUMBER, HONDA 5HP	20	311.21558		BOLT

710 Clutch

Serial Number Range 100000 - 102478

02.00

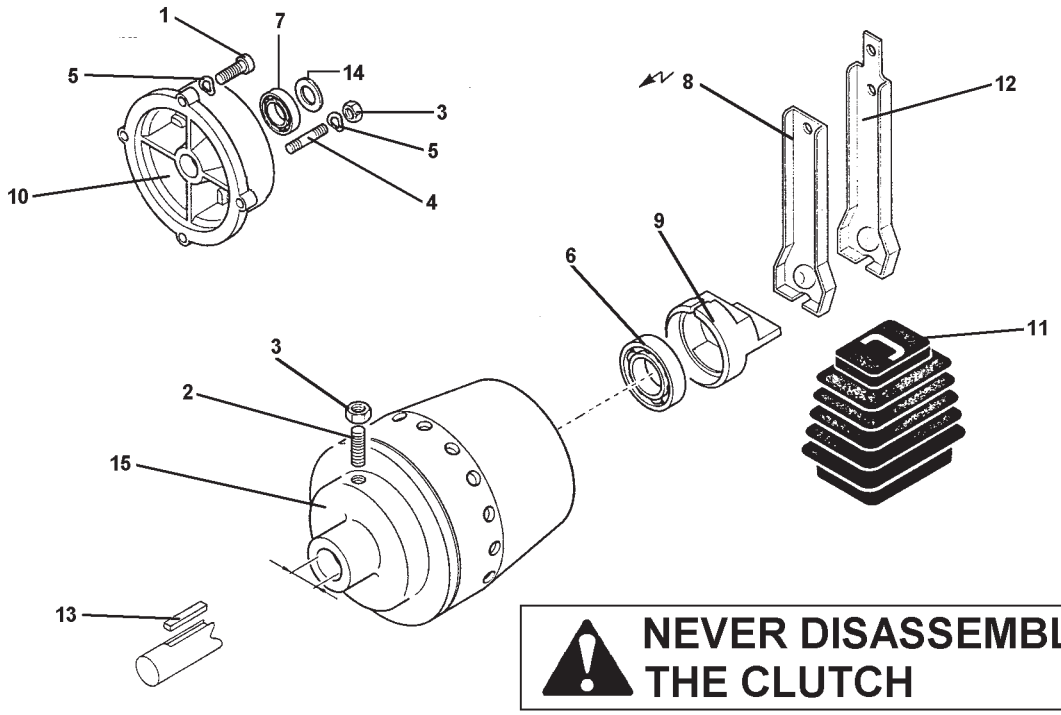

ID	PART NO	QTY	DESCRIPTION	ID	PART NO	QTY	DESCRIPTION
1	311.00003		SCREW 5/16X7/8"	11	551.47842		BOOT
2	311.00786		SCREW M8X30	12	561.47845		LEVER, RECOIL START
3	312.11080		NUT, M8	13	563.49782		KEY
4	313.12088		STUD, M8X40X14X14	14	563.56251		WASHER, 5HP
5	314.23084		WASHER, WAVE	15	592.43150		CLUTCH, 5HP B&S .75" SHAFT
6	371.12173		BEARING, M17X40X12				
7	371.12231		BEARING, 20X47X14				
8	509.47833		CLUTCH LEVER, ELECTRIC START				
9	524.47896		CONE PUSHER				
10	532.47468		FLANGE, 5HP B&S				

710 Clutch

Serial Number Range 102479 - 116637

02.01

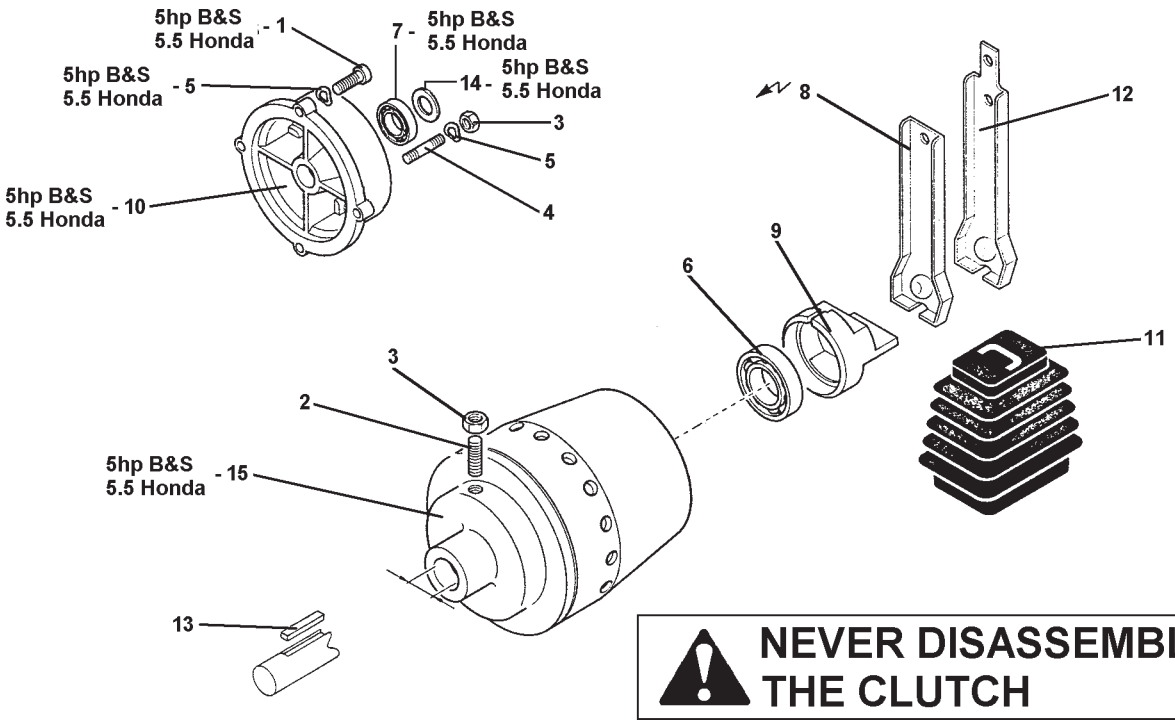

NEVER DISASSEMBLE THE CLUTCH

THIS ILLUSTRATION COVERS THE 710 UNITS THAT HAVE THE 5HP C.A.R.B. ENGINE. THE CLUTCH SPACER IS NO LONGER USED.

ID	PART NO	QTY	DESCRIPTION	ID	PART NO	QTY	DESCRIPTION
1	311.00003		SCREW 5/16X7/8"	11	551.47842		BOOT
2	311.00786		SCREW M8X30	12	561.47845		LEVER, RECOIL START
3	312.11080		NUT, M8	13	563.49782		KEY
4	313.12088		STUD, M8X40X14X14	14	563.56251		WASHER, 5HP B&S & 5.5 HONDA
5	314.23084		WASHER, WAVE	15	592.56252		CLUTCH, 5HP B&S & 5.5 HONDA, .75" SHAFT
6	371.12173		BEARING, M17X40X12				
7	371.12231		BEARING, 20X47X14				
8	509.47833		CLUTCH LEVER, ELECTRIC START				
9	524.47896		CONE PUSHER				
10	532.47468		FLANGE, 5HP B&S & 5.5 HONDA				

710 Clutch

5.5 Intek & GX160

Serial Number Range
116638 - -------

02.02

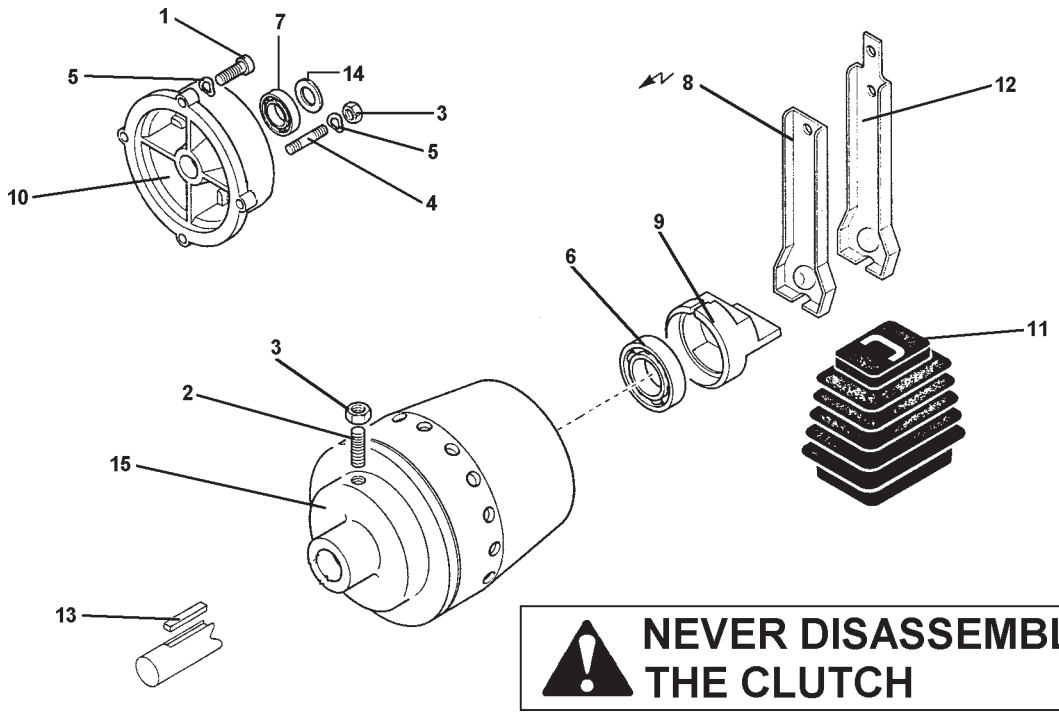

NEVER DISASSEMBLE THE CLUTCH

ID	PART NO	QTY	DESCRIPTION	ID	PART NO	QTY	DESCRIPTION
1	311.00003		SCREW 5/16X7/8"	11	551.57609		BOOT, ELECTRIC START
2	311.00786		SCREW M8X30	11	551.47842		BOOT, RECOIL START
3	312.11080		NUT, M8	12	561.47845		CLUTCH LEVER, RECOIL START
4	313.12088		STUD, M8X40X14X14	13	563.49782		KEY, 5.5 INTEK
5	314.23084		WASHER, WAVE	13	563.56165		KEY, GX160
6	371.12173		BEARING, M17X40X12	14	563.56251		WASHER
7	371.12231		BEARING, M20X47X14	15	592.56252		CLUTCH, 5.5 INTEK & GX160
8	509.56262		CLUTCH LEVER, ELECTRIC START				
9	524.47896		CONE PUSHER				
10	532.47488		FLANGE				

710 Gear Box

Serial Number Range 100000 - 102478

03.00

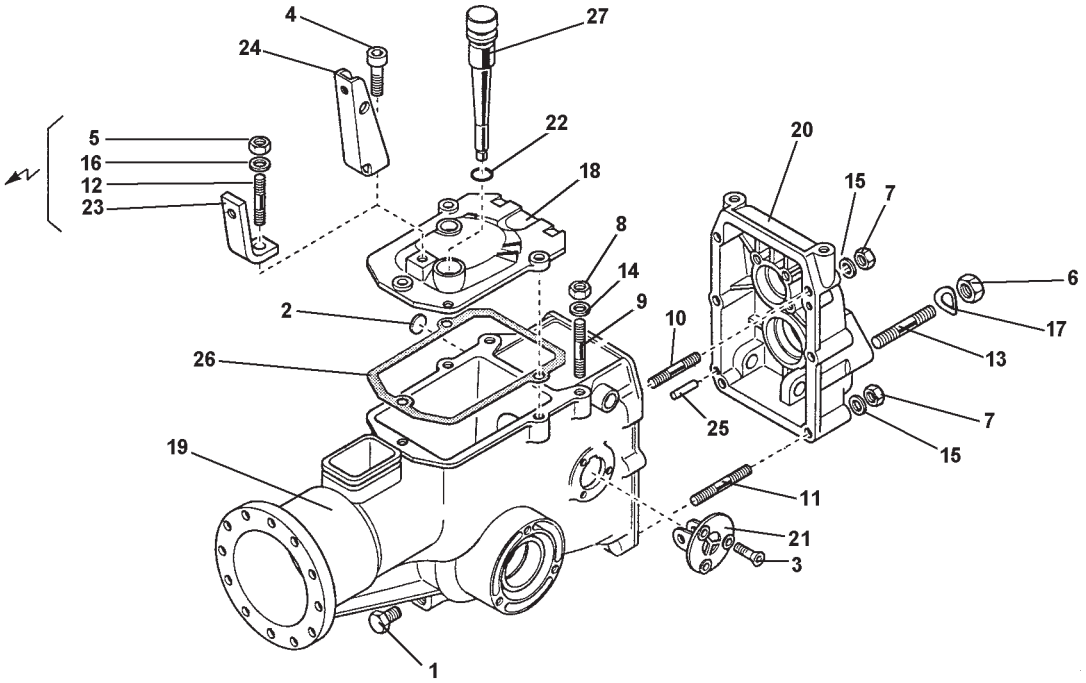

= Electric Start Components

ID	PART NO	QTY	DESCRIPTION	ID	PART NO	QTY	DESCRIPTION
1	300.40001		PLUG	16	314.23105		WAHSER M10.4
2	300.40133		COVER	17	314.23130		WASHER, LOCK, M13
3	311.32562		SCREW, COUNTER SUNK, M6X16	18	531.43128		GEARBOX COVER
4	311.52103		SCREW M10X25	19	531.56325		GEAR BOX CASE
5	312.11100		NUT, M10	20	531.56332		REAR COVER
6	312.21121		NUT, M12X1.25	21	531.56343		REVERSER GEAR COVER, 710
7	312.41080		NUT, SELF LOCKING M8	22	551.02678		"O" RING
8	312.41085		NUT	23	561.43878		CLUTCH BRACKET
9	313.12082		STUD M8X38X14X20	24	561.47923		CLUTCH BRACKET
10	313.12084		STUD M8X58X16X16	25	580.43053		PARALLEL PIN
11	313.12094		STUD M8X68	26	580.43117		GASKET, COVER
12	313.12101		STUD M10X37	27	590.15425		CAP WITH DIP STICK
13	313.12124		STUD M12X1.25X12X52				
14	314.21083		SUPER WASHER 8				
15	314.23084		WASHER, LOCK 8.4				

710 Gear Box

Serial Number Range 102479 - 116637

03.01

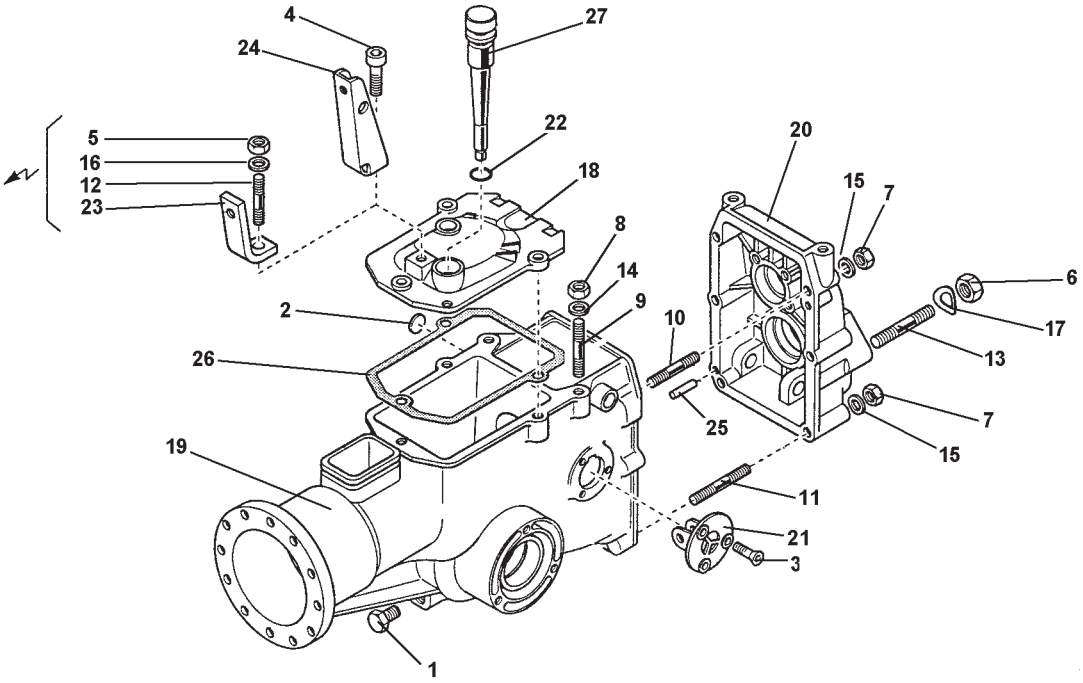

= Electric Start Components

ID	PART NO	QTY	DESCRIPTION	ID	PART NO	QTY	DESCRIPTION
1	300.40001		PLUG	16	314.23105		WAHSER M10.4
2	300.40133		COVER	17	314.23130		WASHER, LOCK, M13
3	311.32562		SCREW, COUNTER SUNK, M6X16	18	531.43128		GEARBOX COVER
4	311.52103		SCREW M10X25	19	531.56325		GEAR BOX CASE
5	312.11100		NUT, M10	20	531.56332		REAR COVER
6	312.21121		NUT, M12X1.25	21	531.56342		REVERSER GEAR COVER, 710
7	312.41080		NUT, SELF LOCKING M8	22	551.02678		"O" RING
8	312.41085		NUT	23	561.43878		CLUTCH BRACKET
9	313.12082		STUD M8X38X14X20	24	561.47923		CLUTCH BRACKET
10	313.12084		STUD M8X58X16X16	25	580.43053		PARALLEL PIN
11	313.12094		STUD M8X68	26	580.43117		GASKET, COVER
12	313.12101		STUD M10X37	27	590.15425		CAP WITH DIP STICK
13	313.12124		STUD M12X1.25X12X52				
14	314.21083		SUPER WASHER 8				
15	314.23084		WASHER, LOCK 8.4				

710 Gear Box

Serial Number Range 116638 - ------

03.02

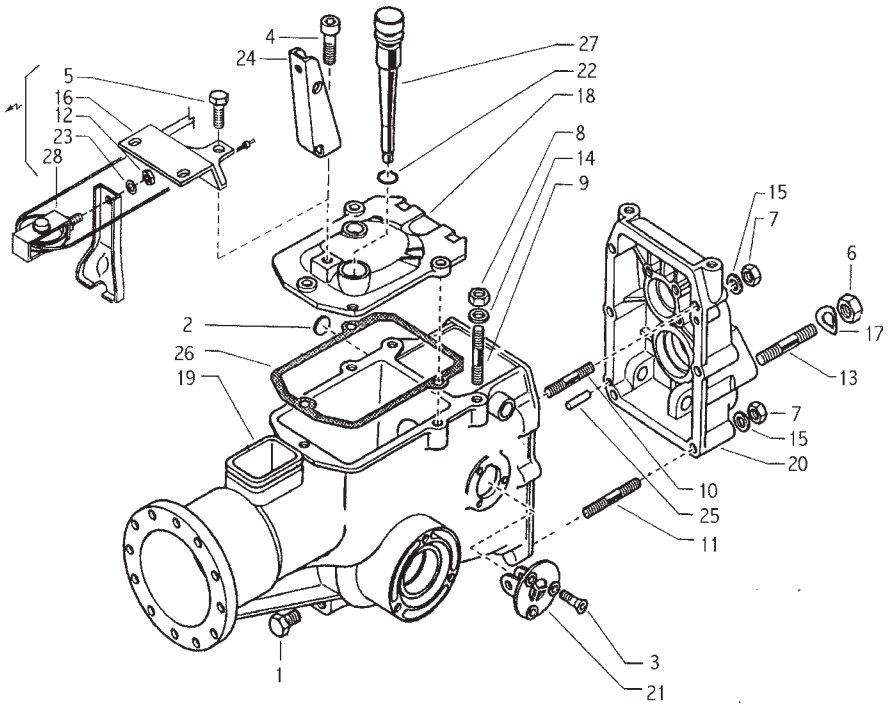

= Electric Start Components

ID	PART NO	QTY	DESCRIPTION	ID	PART NO	QTY	DESCRIPTION
1	300.40001		PLUG	16	561.57394		PLATE
2	300.40133		COVER	17	314.23130		WASHER, LOCK, M13
3	311.32562		SCREW, COUNTER SUNK, M6X16	18	531.43128		GEARBOX COVER
4	311.52103		SCREW M10X25	19	531.56325		GEAR BOX CASE
5	311.12210		BOLT	20	531.56332		REAR COVER
6	312.21121		NUT, M12X1.25	21	531.56343		REVERSER GEAR COVER, 710
7	312.41080		NUT, SELF LOCKING M8	22	551.02678		"O" RING
8	312.41085		NUT	23	314.21083		WASHER
9	313.12082		STUD M8X38X14X20	24	561.47923		CLUTCH BRACKET
10	313.12084		STUD M8X58X16X16	25	580.43053		PARALLEL PIN
11	313.12094		STUD M8X68	26	580.43117		GASKET, COVER
12	312.41080		NUT	27	590.15425		CAP WITH DIP STICK
13	313.12124		STUD M12X1.25X12X52				
14	314.21083		SUPER WASHER 8				
15	314.23084		WASHER, LOCK 8.4				

710 Transmission

Serial Number Range 100000 - 104556

04.00

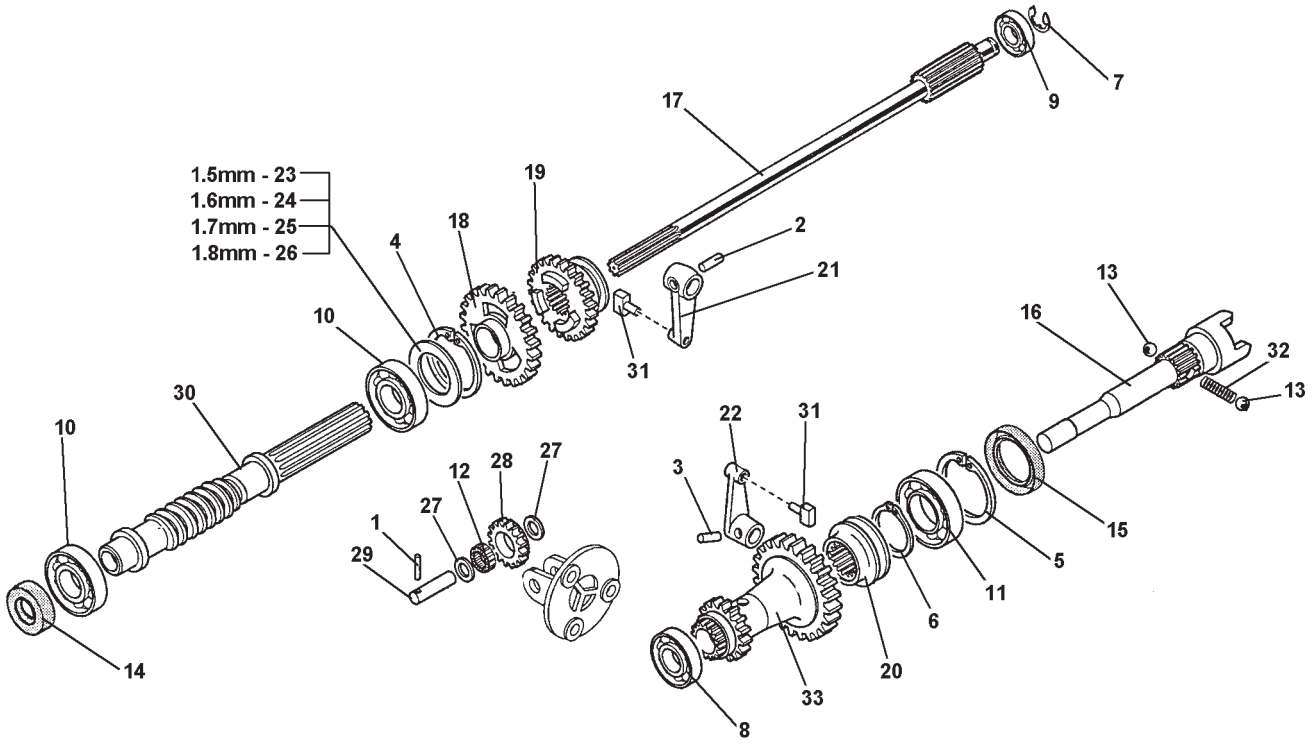

ID	PART NO	QTY	DESCRIPTION	ID	PART NO	QTY	DESCRIPTION
1	342.11025		LOCKING PIN, 2.5X22	21	524.56389		LEVER, SLIDER
2	342.13060		LOCKING PIN, 6X24	22	524.56390		LEVER, PTO ENGAGMENT
3	342.13061		LOCKING PIN, 6X20 SPIRAL	23	563.56328		SHIM, 1.5MM
4	351.11052		CIRCLIP, INTERNAL	24	563.56329		SHIM, 1.6MM
5	351.11055		CIRCLIP, INTERNAL	25	563.56330		SHIM 1.7MM
6	351.21031		CIRCLIP, EXTERNAL	26	563.56331		SHIM 1.8MM
7	352.11120		RETAINING RING	27	563.56348		WASHER
8	371.11151		BEARING, 15X35X11	28	564.56347		REVERSE GEAR
9	371.11152		BEARING, 15X42X13	29	564.56350		PIN, REVERSER GEAR
10	371.11255		BEARING, 25X52X15	30	564.56475		WORM GEAR
11	371.12229		BEARING, 30X55X13	31	580.43086		SHOE
12	373.20120		BEARING, 12X15X10	32	580.56391		SPRING, PTO BALLS
13	379.10832		BALL, 1/4"	**33**	**590.56375**		**DRIVE GEAR, BEFORE SERIAL #102479**
14	382.11501		OIL SEAL, 15X40X10				
15	382.13800		OIL SEAL, 38X55X7	**33**	**590.56378**		**DRIVE GEAR, AFTER SERIAL #102479**
16	524.56335		PTO SHAFT				
17	524.56339		MAIN SHAFT				
18	524.56354		FIRST GEAR				
19	524.56357		SLIDER GEAR				
20	524.56362		PTO SLIDER				

33 - BEFORE SERIAL NUMBER 102479 THE DRIVE GEAR IS PART NUMBER 590.56375. AFTER SERIAL NUMBER 102479 THE DRIVE GEAR IS PART NUMBER 590.56378.

710 Transmission

Serial Number Range
104557 - -------

04.01

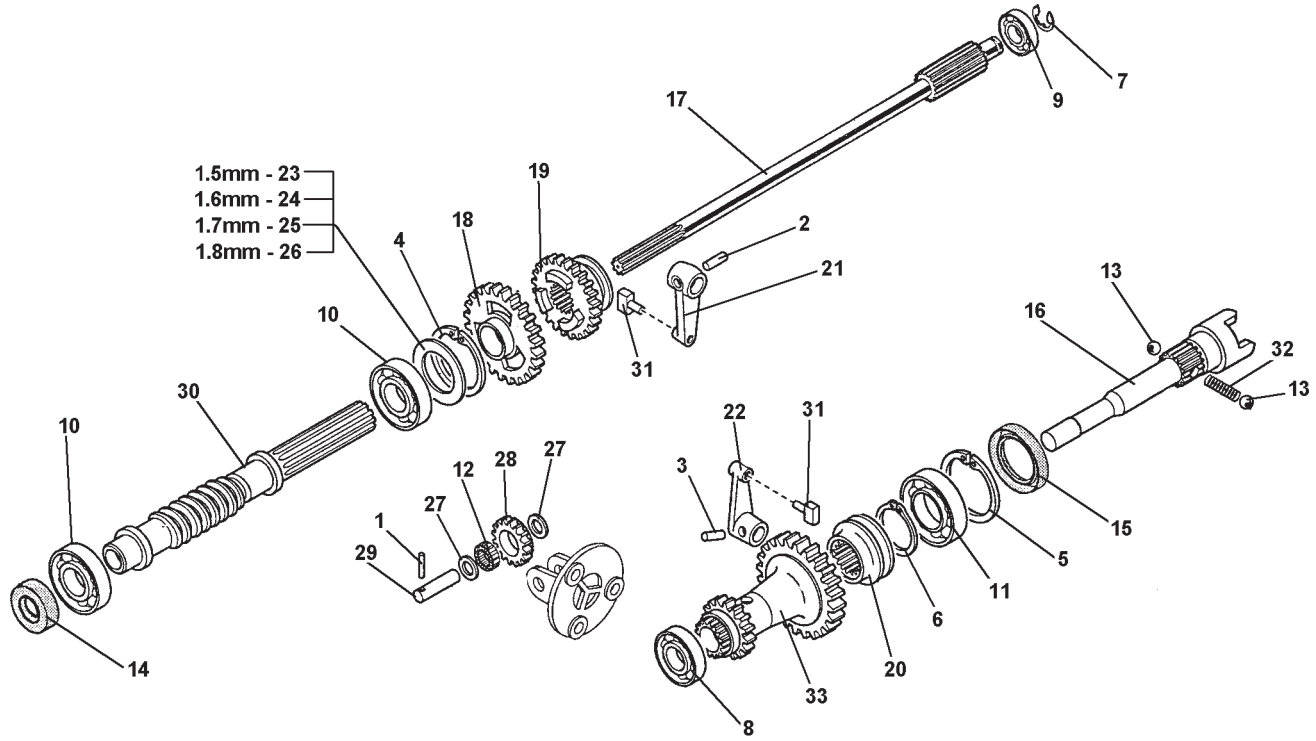

ID	PART NO	QTY	DESCRIPTION	ID	PART NO	QTY	DESCRIPTION
1	342.11025		LOCKING PIN, 2.5X22	21	524.56389		LEVER, SLIDER
2	342.13060		LOCKING PIN, 6X24	22	524.56390		LEVER, PTO ENGAGMENT
3	342.13061		LOCKING PIN, 6X20 SPIRAL	23	563.56328		SHIM, 1.5MM
4	351.11052		CIRCLIP, INTERNAL	24	563.56329		SHIM, 1.6MM
5	351.11055		CIRCLIP, INTERNAL	25	563.56330		SHIM 1.7MM
6	351.21031		CIRCLIP, EXTERNAL	26	563.56331		SHIM 1.8MM
7	352.11120		RETAINING RING	27	563.56348		WASHER
8	371.11151		BEARING, 15X35X11	28	564.56347		REVERSE GEAR
9	371.11152		BEARING, 15X42X13	29	564.56350		PIN, REVERSER GEAR
10	371.11255		BEARING, 25X52X15	30	564.56475		WORM GEAR
11	371.12229		BEARING, 30X55X13	31	580.43086		SHOE
12	373.20120		BEARING, 12X15X10	32	580.56391		SPRING, PTO BALLS
13	379.10832		BALL, 1/4"	33	590.56378		DRIVE GEAR
14	382.11500		OIL SEAL, 15X28X7				
15	382.13800		OIL SEAL, 38X55X7				
16	524.56335		PTO SHAFT				
17	524.56339		MAIN SHAFT				
18	524.56354		FIRST GEAR				
19	524.56356		SLIDER GEAR				
20	524.56362		PTO SLIDER				

710 Wheel Axle

Serial Number Range
100000 - -------

05.00

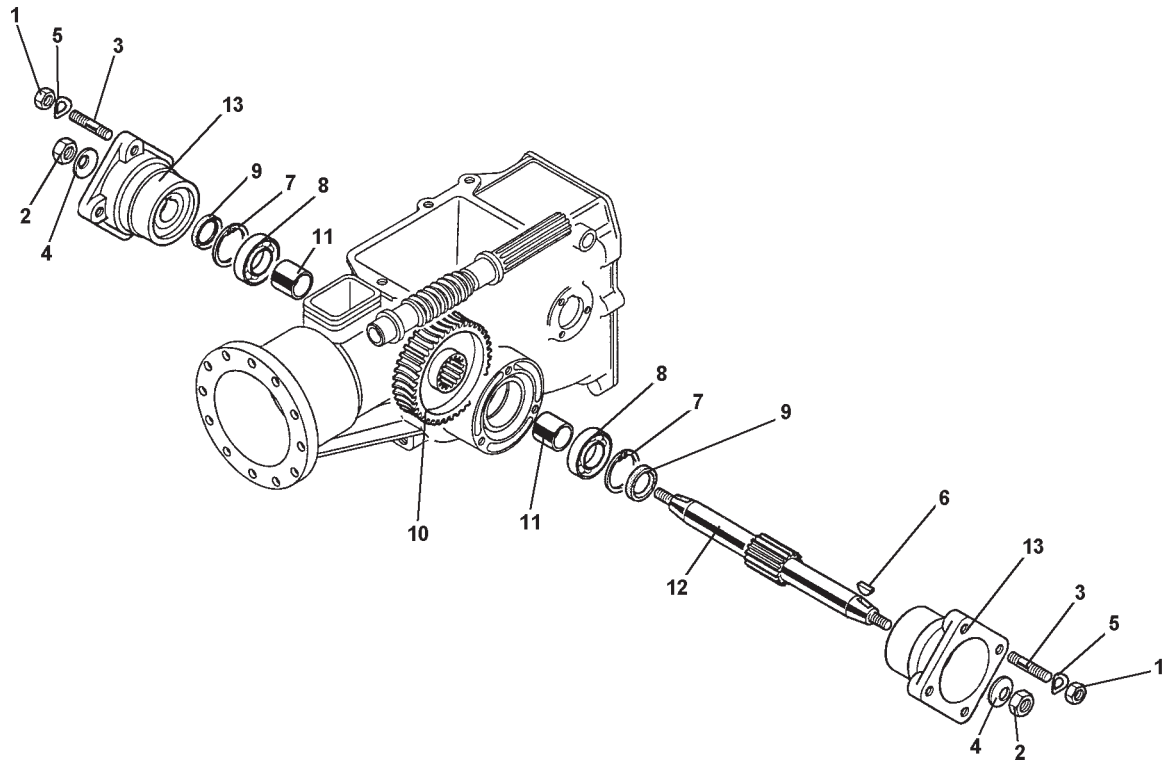

ID	PART NO	QTY	DESCRIPTION	ID	PART NO	QTY	DESCRIPTION
1	312.11100		NUT, M10	11	561.43059		SPACER
2	312.41120		NUT, SELF LOCKING M12	12	563.43058		WHEEL SHAFT
3	313.12102		STUD, M10X40X22X14	13	590.43063		HUB, WHEEL WITH STUDS
4	314.21130		SUPER WASHER, 12				
5	314.23105		WASHER, LOCK 10.5				
6	343.11060		KEY 6X10				
7	351.11052		CIRCLIP, INTERNAL				
8	371.11255		BEARING 25X52X15				
9	382.12501		OIL SEAL, 25X52X10				
10	541.43090		GEAR				

710 Steering Column

Serial Number Range 100000 - -------

06.00

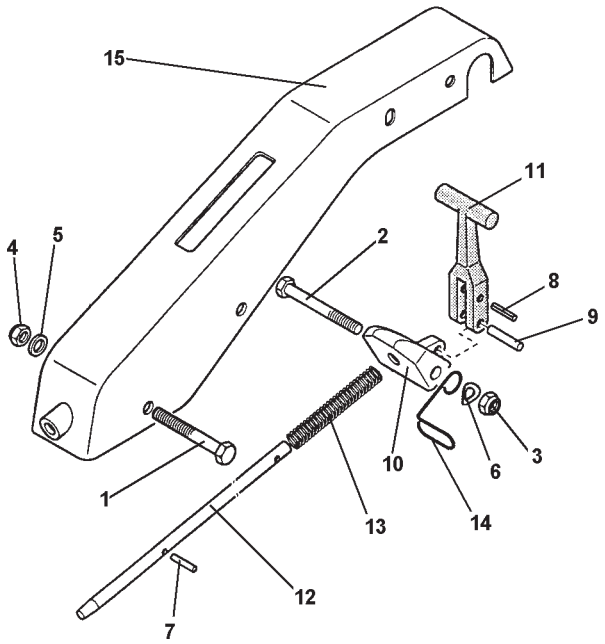

ID	PART NO	QTY	DESCRIPTION	ID	PART NO	QTY	DESCRIPTION
1	311.12294		SCREW, M12X85	11	552.51688		ADJUSTING LEVER
2	311.13210		SCREW, M10X80	12	563.51685		HANDLEBAR POSITION ROD
3	312.41100		NUT, SELF LOCKING, M10	13	580.42219		SPRING, ROD
4	312.41120		NUT, SELF LOCKING, M12	14	580.57266		CABLE GUIDE
5	314.21130		WASHER, M10.4	15	590.51682		STEERING COLUMN
6	314.23105		WASHER, LOCKING, M13				
7	342.11028		PIN, LOCKING				
8	342.11041		PIN, LOCKING, M4X35				
9	342.21070		PIN, LOCKING				
10	552.51686		SUPPORT, RD				

710 Handlebar

Serial Number Range 100000 - 104908

07.00

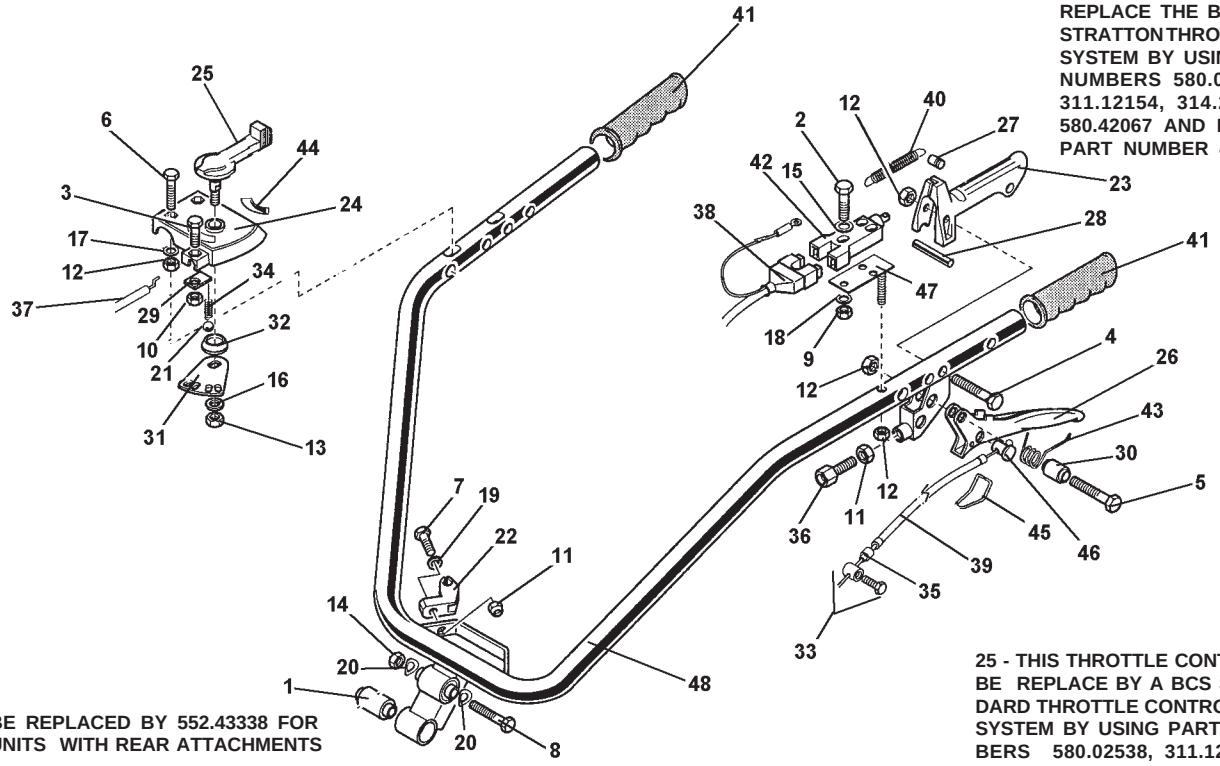

37 - THE KOHLER THROTTLE CONTROL CAN REPLACE THE BRIGGS & STRATTON THROTTLE SYSTEM BY USING PART NUMBERS 580.02538, 311.12154, 314.23084, 580.42067 AND B&S PART NUMBER 492342.

22- CAN BE REPLACED BY 552.43338 FOR USE ON UNITS WITH REAR ATTACHMENTS ONLY.

25 - THIS THROTTLE CONTROL CAN BE REPLACE BY A BCS STANDARD THROTTLE CONTROL SYSTEM BY USING PART NUMBERS 580.02538, 311.12154, 314.23084, 580.42067 AND B&S PART NUMBER 492342.

ID	PART NO	QTY	DESCRIPTION	ID	PART NO	QTY	DESCRIPTION
1	300.10103		SILENTBLOCK	26	561.47655		CLUTCH LEVER
2	311.11086		SCREW TE M4X25	27	561.47711		SPRING PIN
3	311.11089		SCREW, M5X10	28	561.48037		LEVER STOP FOR MOTOR STOP
4	311.11097		SCREW, TE M6X45	29	561.50358		PLATE
5	311.12089		SCREW, M6X25	30	561.50361		LEVER SPACER
6	311.12091		SCREW, M6X40	31	563.50306		THROTTLE LEVER
7	311.12153		SCREW, M8X35	32	571.50312		SPRING
8	311.13210		SCREW, M10X80	33	580.02429		CLAMP, CABLE
9	312.11040		NUT, M4	34	580.42059		SPRING
10	312.11050		NUT, M5	35	580.42167		CABLE END
11	312.11080		NUT, M8	36	580.42202		SCREW, ADJUSTING, M8
12	312.41060		NUT, SELF LOCKING M6	**37**	**580.47462**		**THROTTLE CABLE, B&S**
13	312.41083		NUT, M8	38	580.47568		SWITCH WIRING HARNESS
14	312.41100		NUT, M10	39	580.47629		CLUTCH CABLE
15	314.11043		FLAT WASHER, M4.3	40	580.47712		SPRING
16	314.11130		WASHER, M8.4	41	580.48000		GRIP
17	314.22064		LOCK WASHER, M6.4	42	580.48009		STOP SWITCH
18	314.23043		LOCK WASHER, M4.3	43	580.50345		LEVER SPRING
19	314.23084		WASHER, M8.4	44	580.51601		THROTTLE DECAL
20	314.23105		WAVE WASHER, M10.4	45	580.51670		HOOK
21	379.10832		BALL, 1/4"	46	581.50313		BARREL
22	**552.43340**		**SUPPORT, CONTROL ROD**	47	590.47709		SWITCH PLATE
23	552.48041		MOTOR STOP LEVER	48	590.57105		HANDLE BAR
24	**552.50305**		**THROTTLE**				
25	552.50310		THROTTLE LEVER				

710 Handlebar

Serial Number Range 104909 - 116638

07.01

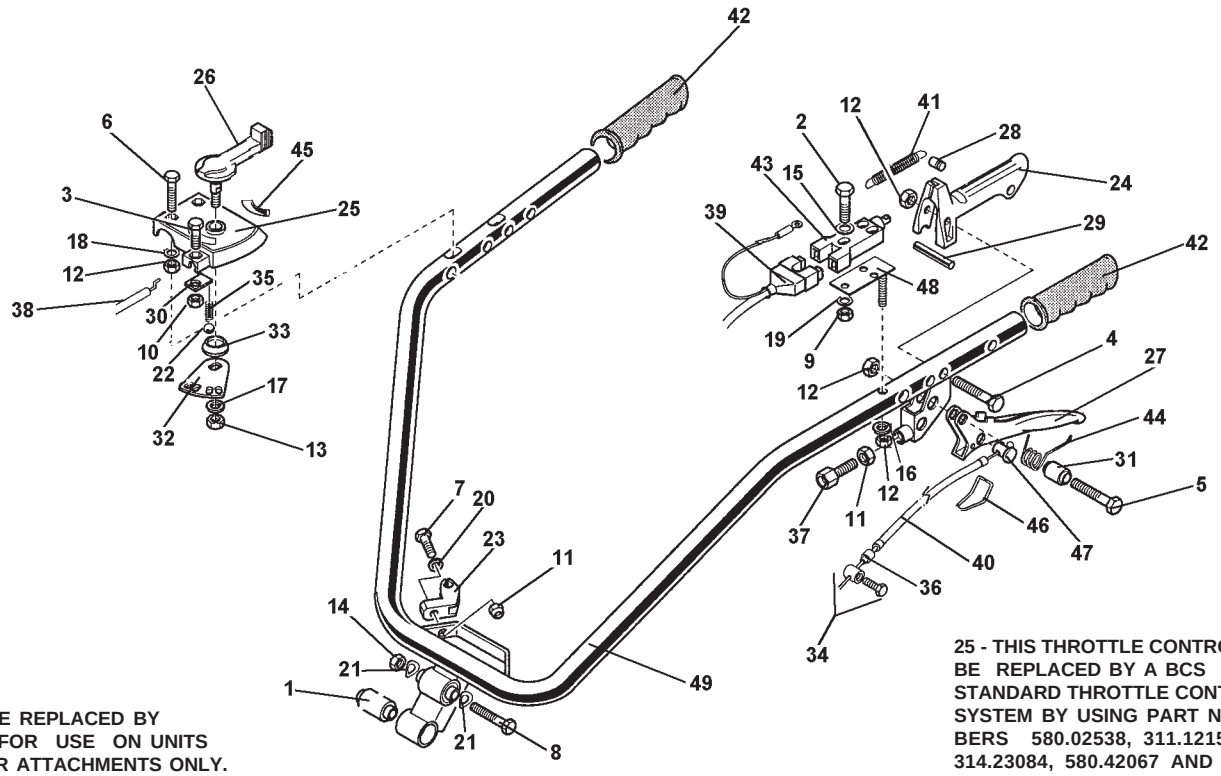

23- CAN BE REPLACED BY 552.43338 FOR USE ON UNITS WITH REAR ATTACHMENTS ONLY.

25 - THIS THROTTLE CONTROL CAN BE REPLACED BY A BCS STANDARD THROTTLE CONTROL SYSTEM BY USING PART NUMBERS 580.02538, 311.12154, 314.23084, 580.42067 AND B&S PART NUMBER 492342.

ID	PART NO	QTY	DESCRIPTION	ID	PART NO	QTY	DESCRIPTION
1	300.10103		SILENTBLOCK	26	552.50310		THROTTLE LEVER
2	311.11086		SCREW TE M4X25	27	561.47655		CLUTCH LEVER
3	311.11089		SCREW, M5X10	28	561.47711		SPRING PIN
4	311.11097		SCREW, TE M6X45	29	561.48037		LEVER STOP FOR MOTOR STOP
5	311.12089		SCREW, M6X25	30	561.50358		PLATE
6	311.12091		SCREW, M6X40	31	561.50361		LEVER SPACER
7	311.12153		SCREW, M8X35	32	563.50306		THROTTLE LEVER
8	311.13210		SCREW, M10X80	33	571.50312		SPRING
9	312.11040		NUT, M4	34	580.02429		CLAMP, CABLE
10	312.11050		NUT, M5	35	580.42059		SPRING
11	312.11080		NUT, M8	36	580.42167		CABLE END
12	312.41060		NUT, SELF LOCKING M6	37	580.42202		SCREW, ADJUSTING, M8
13	312.41083		NUT, M8	**38**	**580.47462**		**THROTTLE CABLE, B&S**
14	312.41100		NUT, M10	39	580.47568		SWITCH WIRING HARNESS
15	314.11043		FLAT WASHER, M4.3	40	580.47629		CLUTCH CABLE
16	314.11064		WASHER, FLAT 6.4	41	580.47712		SPRING
17	314.11130		WASHER, M8.4	42	580.48000		GRIP
18	314.22064		LOCK WASHER, M6.4	43	580.48009		STOP SWITCH
19	314.23043		LOCK WASHER, M4.3	44	580.50345		LEVER SPRING
20	314.23084		WASHER, M8.4	45	580.51601		THROTTLE DECAL
21	314.23105		WAVE WASHER, M10.4	46	580.51670		HOOK
22	379.10832		BALL, 1/4"				
23	**552.43340**		**SUPPORT, CONTROL ROD**	47	581.50313		BARREL
24	552.48041		MOTOR STOP LEVER	48	590.47709		SWITCH PLATE
25	**552.50305**		**THROTTLE**	49	590.57112		HANDLE BAR

710 Handlebar

Serial Number Range 116638 - -------

07.02

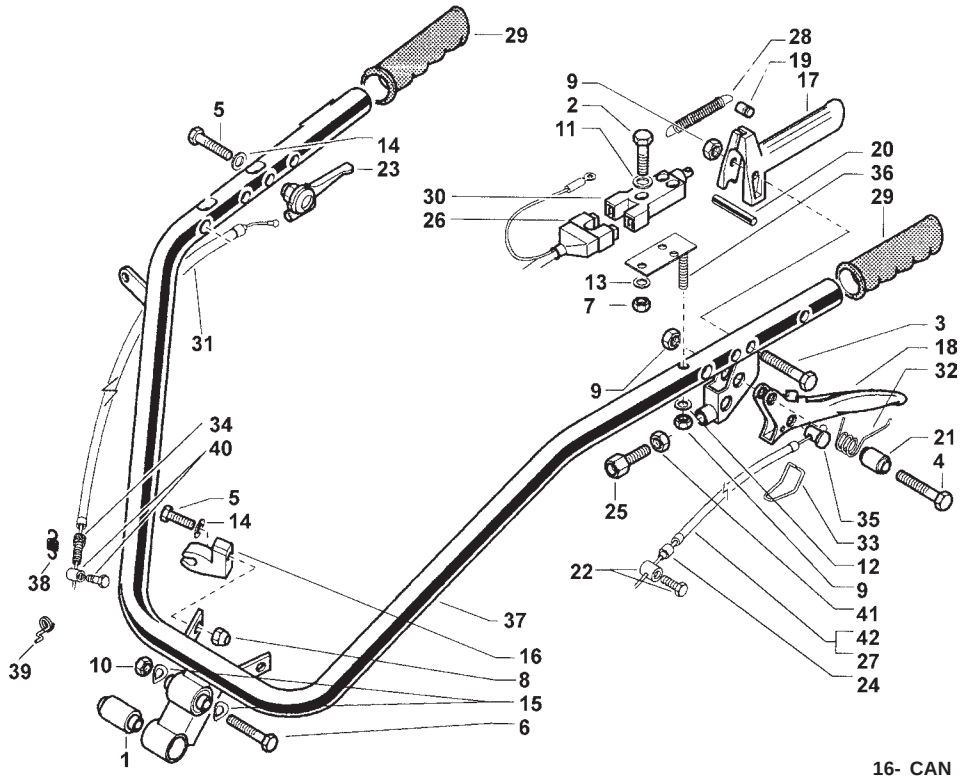

16- CAN BE REPLACED BY 552.43338 FOR USE ON UNITS WITH REAR ATTACHMENTS ONLY.

ID	PART NO	QTY	DESCRIPTION	ID	PART NO	QTY	DESCRIPTION
1	300.10103		SILENTBLOCK	26	580.47568		SWITCH WIRING HARNESS
2	311.11086		SCREW TE M4X25	27	580.47629		CLUTCH CABLE, RECOIL START
3	311.11097		SCREW, TE M6X45	28	580.47712		SPRING
4	311.12089		SCREW, M6X25	29	580.48000		GRIP
5	311.12153		SCREW, M8X35	30	580.48009		STOP SWITCH
6	311.12217		SCREW, M10X80	31	580.43219		THROTTLE CABLE
7	312.11040		NUT, M4	32	580.56593		LEVER SPRING
8	312.41080		NUT, M8	33	580.51670		HOOK
9	312.41060		NUT, SELF LOCKING M6	34	581.47704		CABLE ADJUSTER
10	312.41100		NUT, M10	35	581.50313		BARREL
11	314.11043		FLAT WASHER, M4.3	36	590.47709		SWITCH PLATE
12	314.11064		WASHER, FLAT 6.4	37	590.57112		HANDLE BAR
13	314.23043		LOCK WASHER, M4.3	38	580.56164		SPRING
14	314.23084		WASHER, M8.4	39	580.56158		SPRING
15	314.23105		WAVE WASHER, M10.4	40	580.48002		CABLE CLAMP
16	552.43340		SUPPORT, CONTROL ROD	41	312.11080		NUT M8 DIN 934
17	552.48041		MOTOR STOP LEVER	42	580.53035		CLUTCH CABLE ELECTRIC START
18	561.47655		CLUTCH LEVER				
19	561.47711		SPRING PIN				
20	561.48037		LEVER STOP FOR MOTOR STOP				
21	561.50361		LEVER SPACER				
22	580.02429		CLAMP, CABLE				
23	580.02538		THROTTLE LEVER				
24	580.42167		CABLE END				
25	580.42202		SCREW, ADJUSTING, M8				

710 Controls

Serial Number Range 100000 - 104556

08.00

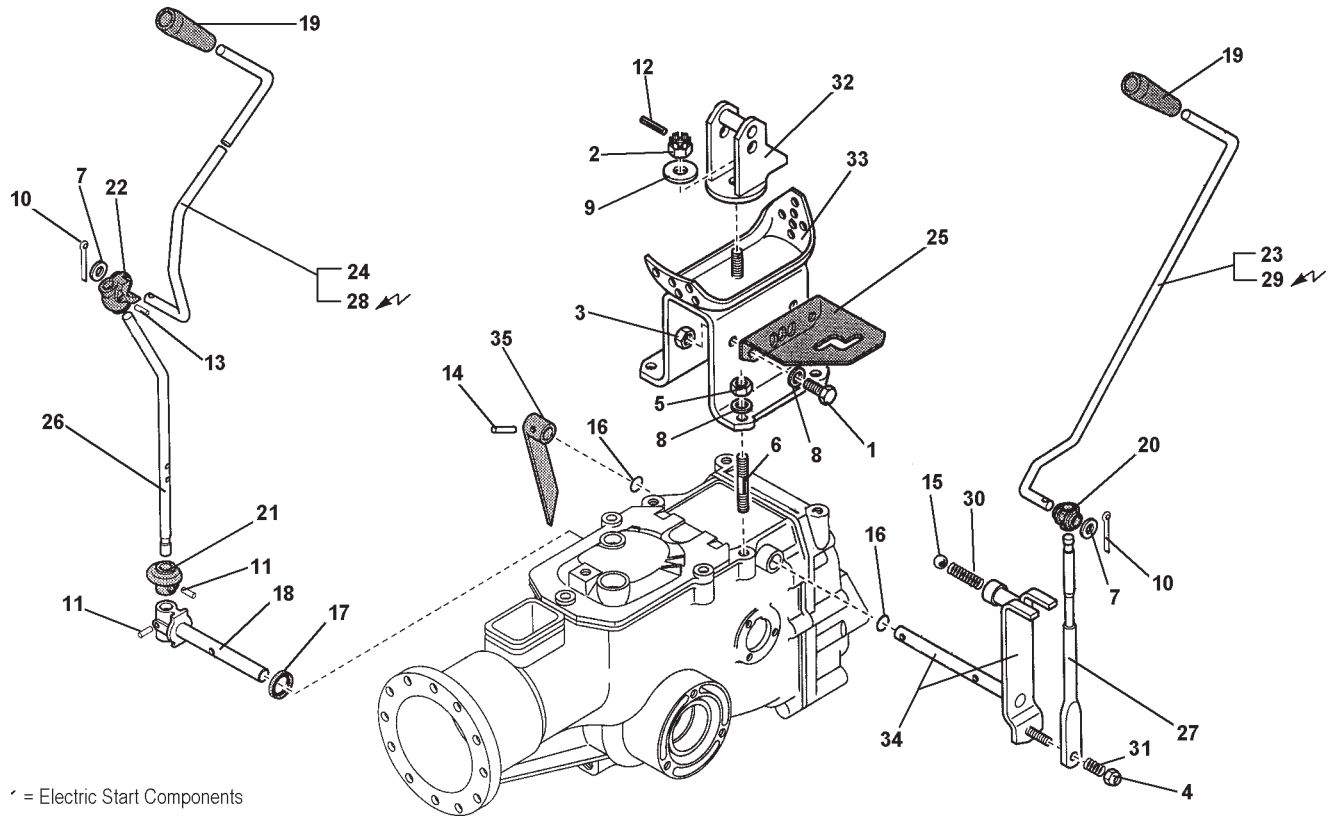

ID	PART NO	QTY	DESCRIPTION	ID	PART NO	QTY	DESCRIPTION
1	311.12150		SCREW, M8X20	21	552.48378		PTO STOP RING
2	312.01212		NUT, CASTLE, M12	22	552.48379		PTO ARTICULATION
3	312.11080		NUT, M8	23	561.43360		SPEED CONTROL ROD, 710, RECOIL
4	312.41080		NUT, SELF LOCKING, M8	24	561.49655		PTO CONTROL ROD, RECOIL START
5	312.41085		NUT, M8	25	561.57234		GEAR SELECTOR, 710
6	313.12082		STUD, M8X38X14X20	26	561.57260		PTO CONTROL LEVER
7	314.11104		WASHER, M10.5	27	561.57271		SPEED CONTROL LEVER
8	314.21083		SUPER WASHER	28	561.57282		PTO CONTROL ROD, ELECTRIC
9	314.23130		LOCK WASHER, M13	29	561.57283		SPEED CONTROL ROD, 710, ELEC.
10	341.10028		COTTER PIN	30	580.20258		SPRING
11	342.13020		PIN, LOCKING, M4X20	31	580.57232		SPRING
12	342.13022		PIN, LOCKING, M3X22	32	590.56900		HANDLE BAR SUPPORT
13	342.13024		PIN, LOCKING, M4X24	33	590.56905		HANDLE BAR ANCHOR
14	342.13061		LOCKING PIN, 6X20 SPIRAL				
15	379.11532		BALL, 15/32"				
16	382.02502		OIL SEAL, 14X18X2.5				
17	382.11400		OIL SEAL, 14X22X4				
18	523.57250		PTO SHAFT				
19	551.42076		KNOB				
20	552.42528		ARTICULATOR				

710 Controls

Serial Number Range 104557 - 106361

08.01

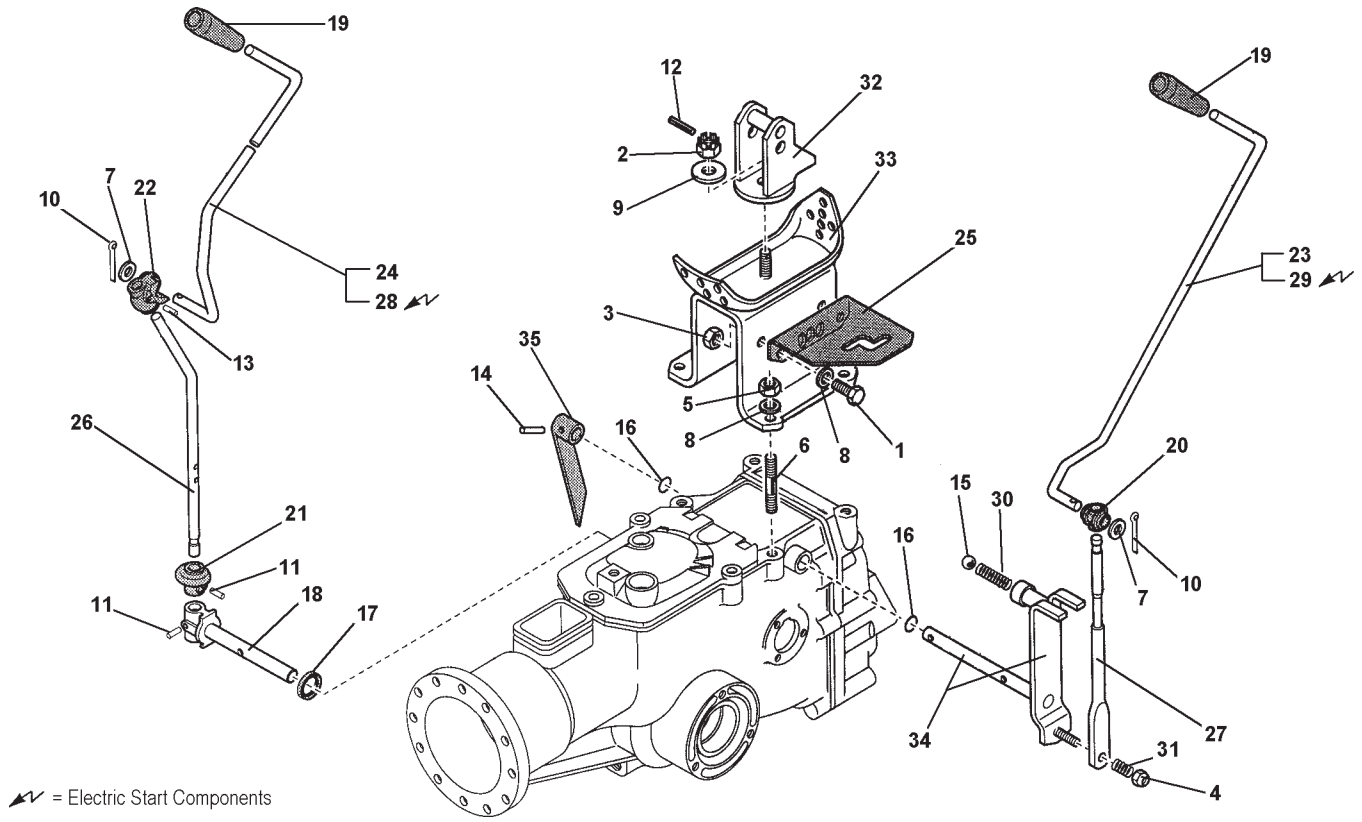

ID	PART NO	QTY	DESCRIPTION	ID	PART NO	QTY	DESCRIPTION
1	311.12150		SCREW, M8X20	21	552.48379		PTO ARTICULATION
2	312.01212		NUT, CASTLE, M12	22	561.57234		GEAR SELECTOR
3	312.11080		NUT, M8	23	561.57260		PTO CONTROL LEVER
4	312.41080		NUT, SELF LOCKING, M8	24	561.57271		SPEED CONTROL LEVER
5	312.41085		NUT, M8	25	561.57282		PTO CONTROL ROD
6	313.12082		STUD, M8X38X14X20	26	561.57283		SPEED CONTROL ROD
7	314.11104		WASHER, M10.5	27	580.43176		SPRING
8	314.21083		SUPER WASHER	28	580.57232		SPRING
9	314.23130		LOCK WASHER, M13	29	590.56900		HANDLE BAR SUPPORT
10	341.10028		COTTER PIN	30	590.56905		HANDLE BAR ANCHOR
11	342.13020		PIN, LOCKING, M4X20	31	590.57228		SPEED CONTROL LEVER
12	342.13022		PIN, LOCKING, M3X22	32	590.57338		PTO LOCKOUT LEVER
13	342.13024		PIN, LOCKING, M4X24				
14	342.13061		LOCKING PIN, 6X20 SPIRAL				
15	379.11532		BALL, 15/32"				
16	382.11400		OIL SEAL, 14X22X4				
17	523.57250		PTO SHAFT				
18	551.42076		KNOB				
19	552.42528		ARTICULATOR				
20	552.48378		PTO STOP RING				

710 Controls

Serial Number Range 106362 - ------

08.02

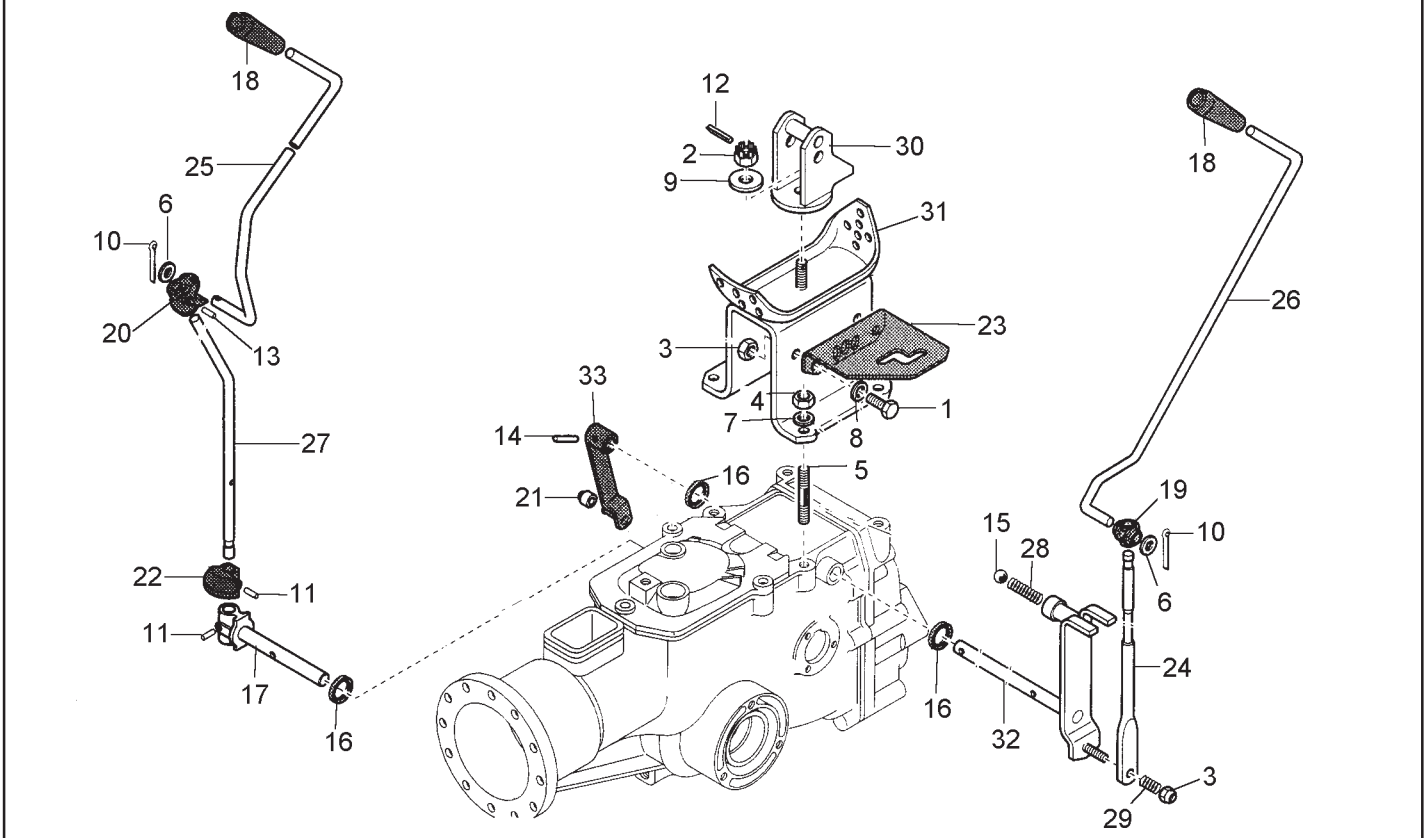

ID	PART NO	QTY	DESCRIPTION	ID	PART NO	QTY	DESCRIPTION
1	311.12150		SCREW, M8X20	21	552.57313		PTO LOCKOUT RING
2	312.01212		NUT, CASTLE, M12	22	552.57321		PTO STOP RING
3	312.41080		NUT, SELF LOCKING, M8	23	561.57234		GEAR SELECTOR
4	312.41085		NUT, M8	24	561.57271		SPEED CONTROL LEVER
5	313.12082		STUD, M8X38X14X20	25	561.57282		PTO CONTROL ROD
6	314.11104		WASHER, M10.5	26	561.57283		SPEED CONTROL ROD
7	314.21083		SUPER WASHER	27	561.57323		PTO CONTROL LEVER
8	314.23084		WASHER, WAVE	28	580.43176		SPRING
9	314.23130		LOCK WASHER, M13	29	580.57232		SPRING
10	341.10028		COTTER PIN	30	590.56900		HANDLE BAR SUPPORT
11	342.13020		PIN, LOCKING, M4X2020	31	590.56905		HANDLE BAR ANCHOR
12	342.13022		PIN, LOCKING, M3X22	32	590.57228		SPEED CONTROL LEVER
13	342.13024		PIN, LOCKING, M4X24	33	590.57325		PTO LOCKOUT LEVER
14	342.13061		LOCKING PIN, 6X20 SPIRAL				
15	379.11532		BALL, 15/32"				
16	382.11400		OIL SEAL, 14X22X4				
17	523.57250		PTO SHAFT				
18	551.42076		KNOB				
19	552.42528		ARTICULATOR				
20	552.48379		PTO ARTICULATION				

710 Wheels

Serial Number Range 100000 - -------

09.00

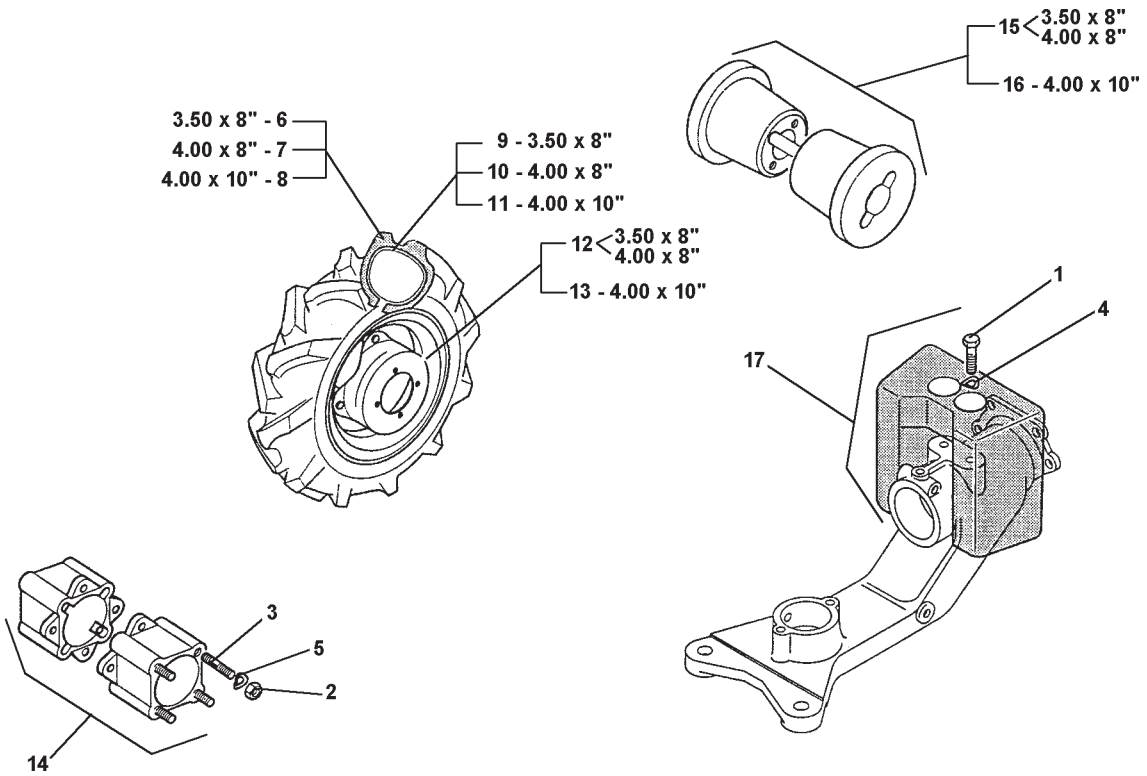

ID	PART NO	QTY	DESCRIPTION	ID	PART NO	QTY	DESCRIPTION
1	311.12151		SCREW, M8X25	11	394.14010		TUBE 4.00X10"
2	312.11100		NUT, M10	12	580.43250		WHEEL DISC, 3.50X8" & 4.00X8"
3	313.12102		STUD, M10X40X22X14	13	580.48330		RIM, 4.00X10"
4	314.23084		WASHER, M8.4	14	922.43685		WHEEL SPACERS, FIXED
5	314.23105		WASHER, LOCK, 10.5	15	922.43686		WHEEL WEIGHTS 48#
6	391.13502		TIRE 3.50X8" TRACTOR	16	922.48715		WHEEL WEIGHTS 66#
7	391.14008		TIRE 4.00X8" TRACTOR	17	922.48923		CUTTER BAR WEIGHT, 26#
8	391.14010		TIRE 4.00X10" TRACTOR				
9	NLA		TUBE 3.50X8" (USE 394.14008)				
10	394.14008		TUBE 4.00X8"				